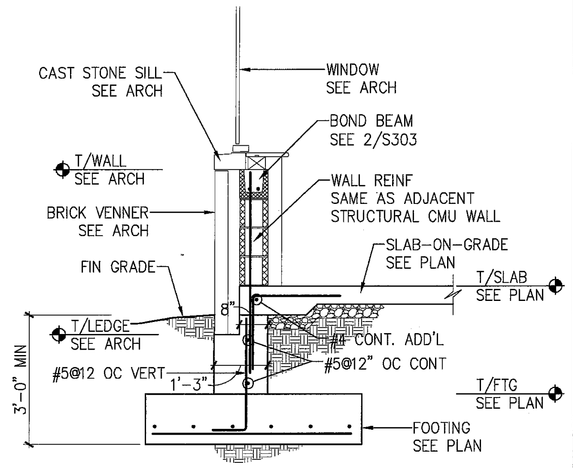

13 TYP EXTERIOR CMU WALL DETAIL AT WINDOWS NO SCALE

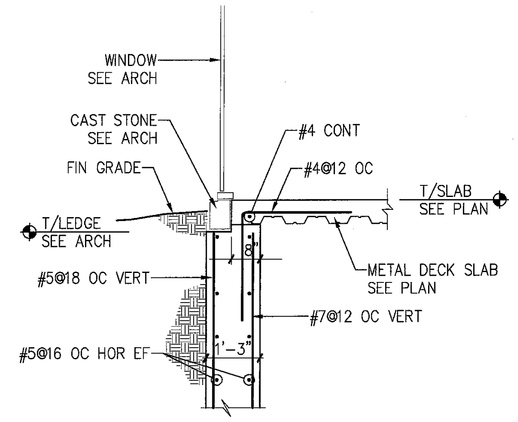

11 FOUNDATION WALL DETAIL AT WINDOWS NO SCALE

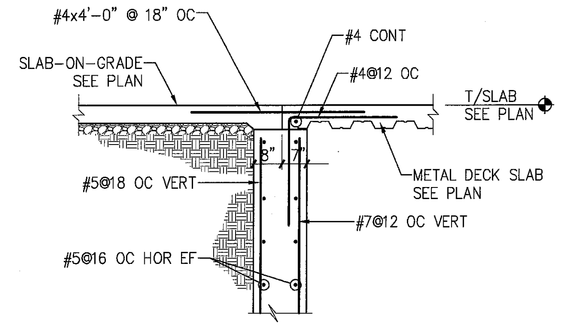

8 S.O.G. INTERFACE DETAIL AT METAL DECK SLAB NO SCALE

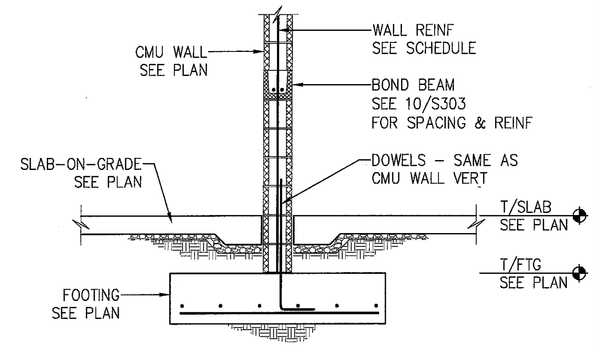

4 TYP INTERIOR STRUCTURAL CMU WALL DETAIL NO SCALE

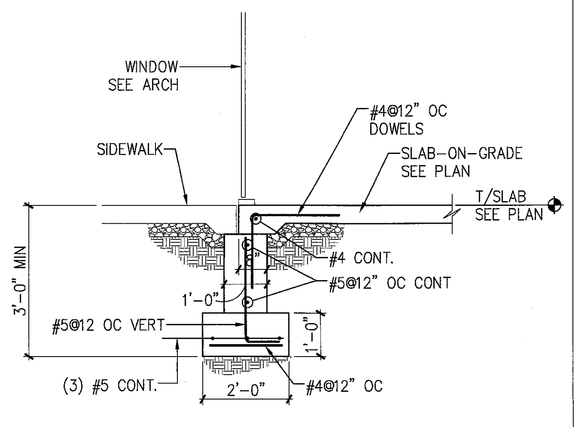

12 TYP SLAB EDGE DETAIL AT COURTYARD NO SCALE

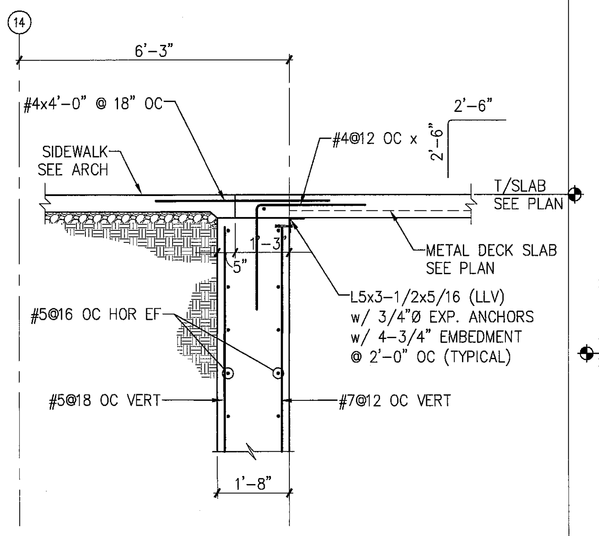

10 FOUNDATION WALL DETAIL AT DOORWAY NO SCALE

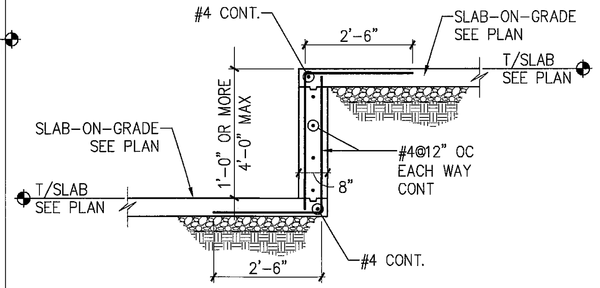

7 TYP STEP IN SLAB-ON-GRADE DETAIL NO SCALE

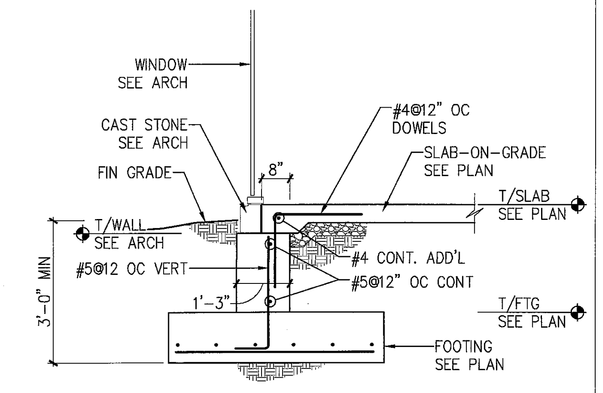

3 TYP FDN WALL DETAIL AT WINDOWS NO SCALE

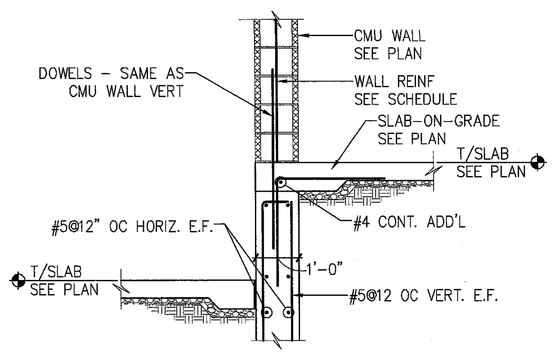

14 12" THK. CONCRETE WALL DETAIL NO SCALE

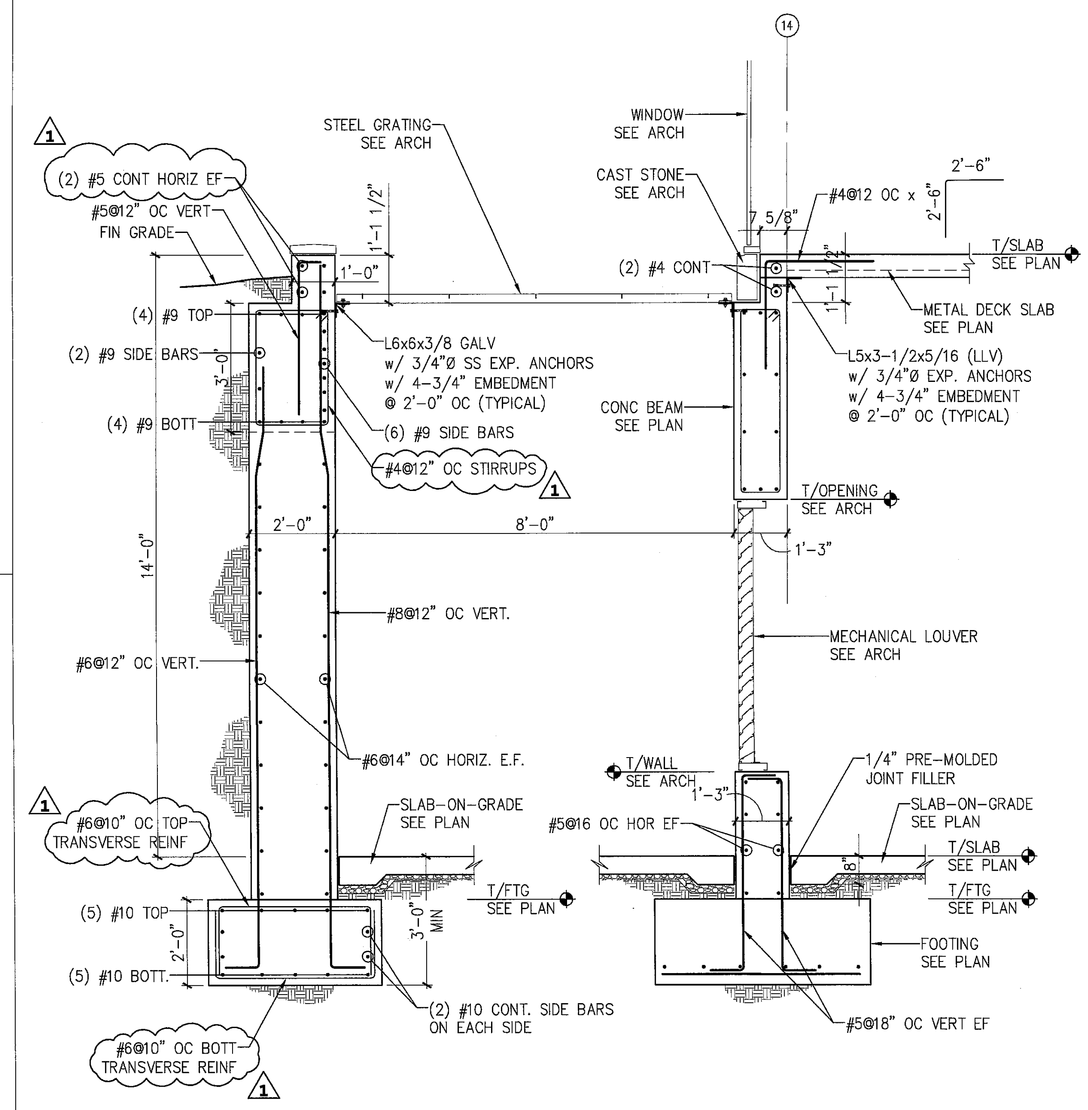

9 FOUNDATION WALL SECTION AT AREA WAY NO SCALE

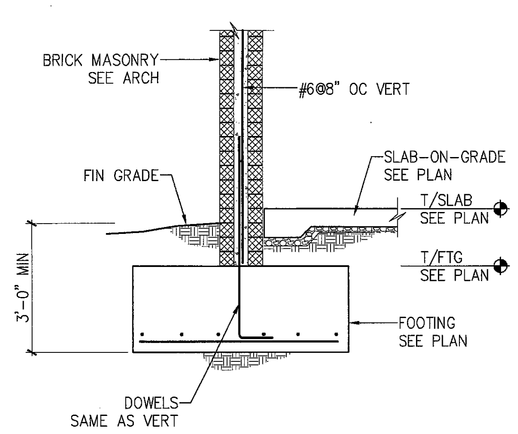

6 TYP BRICK MASONRY FENCE WALL NO SCALE

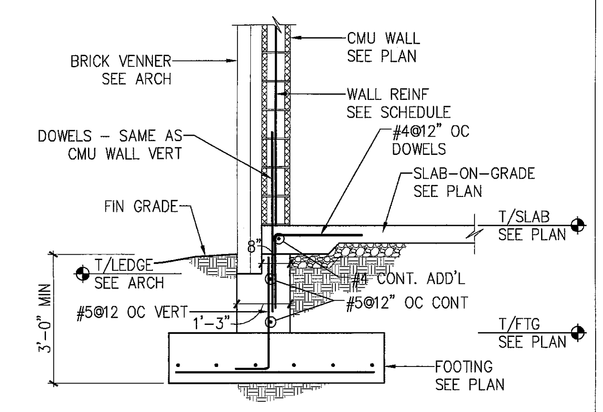

2 TYP EXTERIOR WALL DETAIL NO SCALE

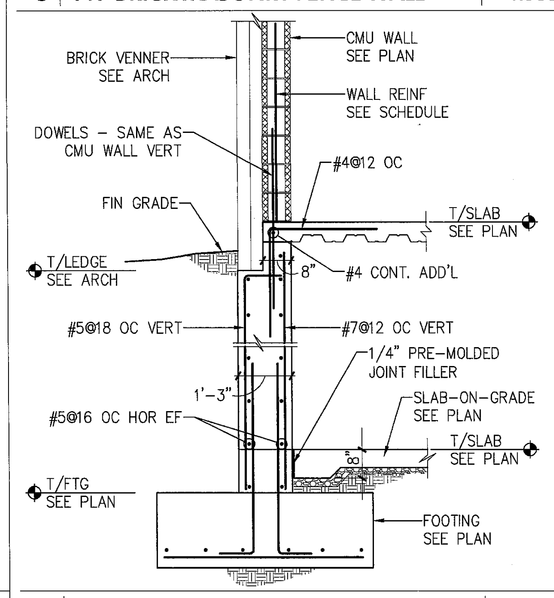

5 TYP FOUNDATION WALL DETAIL NO SCALE

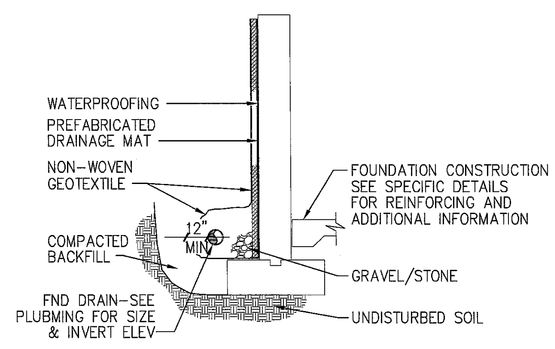

1 TYPICAL PERIMETER DRAINAGE SYSTEM NO SCALE

Einhorn Yaffee Prescott
Architecture & Engineering, P.C.
1000 Potomac Street, NW
Washington, D.C. 20007
Telephone: 202.471.5000
Fax: 202.471.5050

eypae.com

EYP/

KEY PLAN:

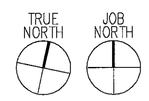

NO.	REVISION/SUBMISSION	DATE
1	ADDENDUM #3	4.1.2008

THE COLLEGE OF NEW JERSEY

New Art & IMM Building

Ewing, New Jersey

DATE:	
SCALE:	AS NOTED
EYP PROJECT NO.	1006041.01
DESIGNED BY:	APT
DRAWN BY:	APT
CHECKED BY:	FDL

FRANKLIN D. HALLORAN-LANCASTER
NJ PROFESSIONAL ENGINEER
LICENSE NO. GE044857

Structural Concrete - Sections & Details

S302

© 2007 Einhorn Yaffee Prescott, A&E