GENERAL NOTES FOR ALL SITE/CIVIL DRAWINGS:

1. THIS SET OF PLANS HAS BEEN PREPARED FOR THE PURPOSES OF AGENCY REVIEW AND APPROVAL. THIS SET OF PLANS SHALL NOT BE UTILIZED FOR CONSTRUCTION DOCUMENTS UNTIL ALL CONDITIONS OF APPROVAL HAVE BEEN SATISFIED ON THE DRAWINGS AND EACH DRAWING HAS BEEN REVISED TO INDICATE "ISSUED FOR CONSTRUCTION."

2. PLANIMETRICS SHOWN HEREON WERE TAKEN FROM A "PLAN SHOWING TOPOGRAPHIC AND PLANIMETRIC SURVEY OF A PORTION OF PROPERTY OF "THE COLLEGE OF NEW JERSEY," EWING TOWNSHIP, MERCER COUNTY, NJ, SCALE 1"=30', DATED JANUARY 31, 2007 BY NASSAU SURVEYING, A DIVISION OF VAN NOTE-HARVEY ASSOCIATES, P.C. PRINCETON, NJ.

3. HORIZONTAL DATUM IS REFERENCED TO THE NEW JERSEY STATE PLANE COORDINATE SYSTEM, NORTH AMERICAN DATUM OF 1983. SPOT ELEVATIONS SHOWN HEREON ARE REFERENCED TO THE NATION GEODETIC VERTICAL DATUM OF 1988.

4. INFORMATION SHOWN HEREON PERTAINING TO EXISTING UNDERGROUND UTILITIES WAS TAKEN FROM DIRECT FIELD MEASUREMENTS WHERE POSSIBLE, AND SUPPLEMENTAL DATA WAS TAKEN FROM EXISTING RECORDS PROVIDED BY THE COLLEGE OF NEW JERSEY. SAI SUPPLEMENTAL INFORMATION IS SHOWN HEREON FOR INFORMATIONAL PURPOSES ONLY AND IS NOT GARUNTEED BY THIS OFFICE TO BE ACCURATE OR COMPLETE. FOR DESIGN PURPOSES, A SUBSURFACE INVESTIGATION WILL BE REQUIRED TO DETERMINE THE EXACT HORIZONTAL AND VERTICAL ALLIGNMENTS OF ALL AFFECTED UNDERGROUND UTILITIES.

5. 100 YEAR FLOODPLAINS DO NOT EXIST ON THIS SITE.

6. ALL CONSTRUCTION MATERIALS AND METHODS FOR ROADWAY, PARKING AREAS, PAVING, SITE WORK, AND DRAINAGE CONSTRUCTION SHALL BE IN ACCORDANCE WITH NJDOT SPECIFICATIONS FOR ROAD AND BRIDGE CONSTRUCTION, LATEST REVISION, EXCEPT AS MODIFIED HEREON AND IN THE SPECIFICATIONS.

7. ALL CONTRACTORS ARE REQUIRED TO NOTIFY THE ENGINEER (VNHA) IMMEDIATELY (AND PRIOR TO CONSTRUCTION) OF ANY PLAN/SPECIFICATION DISCREPENCIES, LAYOUT/ELEVATION DISCREPENCIES, CONFLICTS, APPARENT ERRORS, OMISSIONS OR OF ANY OTHER INFORMATION CONTAINED HEREIN WHICH THE CONTRACTOR FEELS IS UNCLEAR AS TO MEANING. ENGINEER WILL PROVIDE CLARIFICATION AND, IF NECESSARY CORRECTIONS AS REQUIRED BY THE CONTRACTOR FOR PERFORMANCE OF CONTRACTORS WORK.

8. MERCER COUNTY SOIL CONSERVATION DISTRICT SHALL BE NOTIFIED IN WRITING 72 HOURS BEFORE ANY LAND DISTURBANCE.

UTILITY CONSTRUCTION NOTES:

1. CONTRACTOR SHALL RELOCATE ALL UTILITIES PRIOR TO BEGINNING CONSTRUCTION. LOCATION/INSTALLATION OF TEMPORARY REROUTED UTILITIES (IF NECESSARY) SHALL MEET THE REQUIREMENTS OF THE UTILITY COMPANY AND/OR THE COLLEGE OF NEW JERSEY.

2. EXISTING UTILITY INFORMATION SHOWN HEREON HAS BEEN COLLECTED FROM VARIOUS SOURCES AND IS NOT GARUNTEED AS TO ACCURACY OR COMPLETENESS. THE CONTRACTOR SHALL VERIFY ALL INFORMATION TO HIS/HER SATISFACTION PRIOR TO EXCAVATION. WHERE EXISTING UTILITIES ARE TO BE CROSSED BY PROPOSED CONSTRUCTION, TEST PITS SHALL BE DUG BY THE CONTRACTOR PRIOR TO CONSTRUCTION TO ASCERTAIN EXISTING INVERTS, MATERIALS, AND SIZES. TEST PIT INFORMATION SHALL BE GIVEN TO THE ENGINEER PRIOR TO CONSTRUCTION TO PERMIT ADJUSTMENTS AS REQUIRED TO AVOID CONFLICTS.

3. THE CONTRACTOR SHALL CALL THE "ONE NUMBER TO CALL SYSTEM" 1-800-272-1000 NOT LESS THAN 72 HOURS NOR MORE THAN 10 WORKING DAYS PRIOR TO OPLANNED WORK TO NOTIFY UTILITY OWNERS OF THE INTENT TO START WORK. THE CONTRACTOR IS RESPONSIBLE FOR NOTIFYING NON-MEMBER UTILITY OWNERS INDIVIDUALLY. ALL WORK SHALL BE COORDINATED WITH UTILITY OWNERS INCLUDING, BUT NOT LIMITED TO, PUBLIC SERVICE ELECTRIC AND GAS CO., VERIZON TELEPHONE CO., TRENTON WATER WORKS, PRIOR TO THE START OF CONSTRUCTION.

4. ALL ELECTRIC, GAS, TELEPHONE, AND CATV, ETC., SHALL BE INSTALLED UNDERGROUND AND COORDINATED WITH APPLICABLE UTILITY COMPANIES.

5. ALL DOMESTIC WATER LINES AND SANITARY SEWER SHALL BE SEPARATED BY A MINIMUM HORIZONTAL DISTANCE OF 10' AND A MINIMUM CLEAR VERTICAL DISTANCE OF 18" AT CROSSINGS.

6. ALL ROOF DRAINS, WATER SERVICES, AND SANITARY CONNECTIONS TO BE COORDINATED WITH ARCHITECTURAL PLANS WHERE APPROPRIATE.

7. ALL SANITARY SEWER MAINS, SERVISE AND APPURTENCES SHALL BE INSTALLED IN ACCORDANCE WITH ETH REQUIREMENTS OF THE EWING-LAWRENCE SEWAGE AUTHORITY.

8. PIPE LENGTHS SHOWN ARE FROM CENTER OF STRUCTURE TO CENTER OF STRUCTURE.

9. PRECAST OR CAST-IN-PLACE REINFORCED CONCRETE STRUCTURES MAY BE UTILIZED FOR DRAINAGE, AND SANITARY SEWER SYSTEMS UPON SUBMISSION OF AND APPROVAL OF SHOP DRAWINGS BY ENGINEER. ALL SHOP DRAWINGS ARE TO BE CERTIFIED BY A NEW JERSEY LISCENSED PROFESSIONAL ENGINEER. ALL PRECAST AND CAST-IN-PLACE STRUCTURES ARE TO BE DESIGNED TO AASHTO H-20 LOADING REQUIREMENTS.

10. ALL DEMOLISHED STORM PIPING SHALL BE REMOVED BACK TO AN EXISTING MANHOLE OR INLET.

GRADING CONSTRUCTION NOTES:

1. TOPSOIL TO BE SPREAD AND ALL DISTURBED AREAS TO BE STABILIZED IN ACCORDANCE WITH SOIL EROSION AND SEDIMENT CONTROL NOTES.

2. ALL STRUCTURAL FILL REQUIRED IN AREAS OF PROPOSED AND FUTURE IMPROVEMENTS SUCH AS UTILITIES, SANITARY SEWER, STORM DRAINAGE, BUILDINGS, PAVEMENTS, WALKS, ETC. MUST BE PLACED AND COMPACTED ETC. IN STRICT ACCORDANCE WITH THE RECOMMENDATIONS OF THE GEOTECHNICAL ENGINEER FOR THE TYPE OF MATERIAL UTILIZED.

3. ALL SOIL AND STONE AGGREGATES BROUGHT TO THE SITE SHALL BE CERTIFIED AS MEETING NEW JERSEY DEPARTMENT OF ENVIRONMENTAL PROTECTION "CLEAN SOILS STANDARDS."

4. HANDICAP RAMPS SHALL BE PROVIDED AT ALL SIDEWALK INTERSECTION AT DRIVEWAYS, PARKING AREAS, ETC. AND SHALL COMPLY WITH A.D.A. REQUIREMENTS.

5. NO SIDEWALK SLOPE SHALL BE GREATER THAN 1:20 (5%).

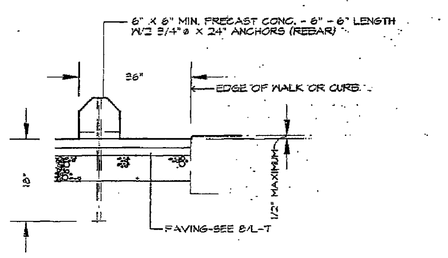

CONCRETE TIRE STOP
N.T.S.

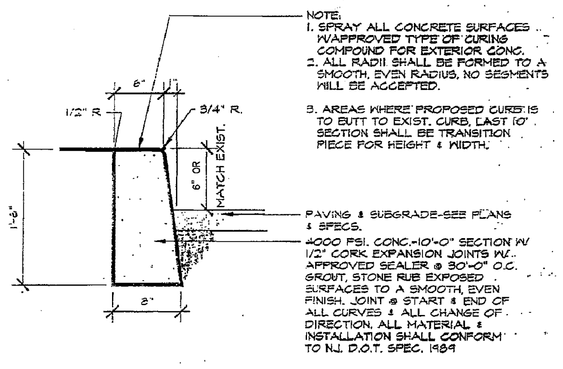

CURB DETAIL
N.T.S.

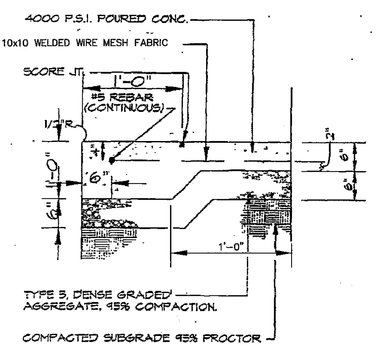

CONCRETE SIDEWALK
N.T.S.

NOTE:

REINFORCEMENT TO BE PLACED IN SIDEWALKS 10' WIDE OR GREATER.

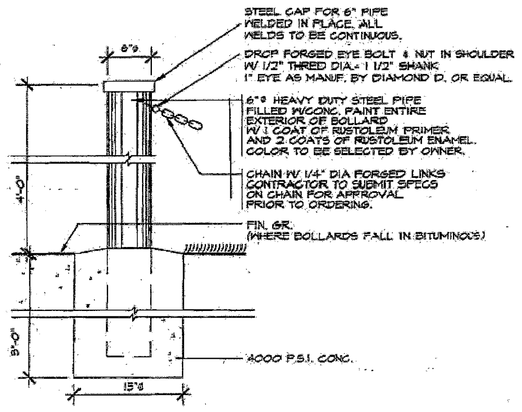

STEEL BOLLARD
N.T.S.

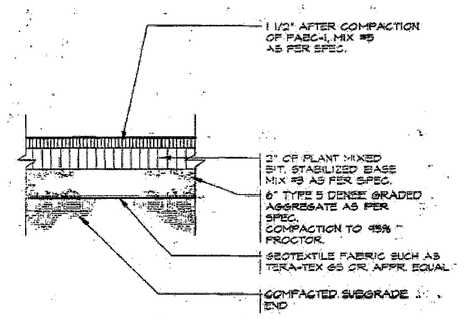

BITUMINOUS PAVING-PARKING
NOT TO SCALE

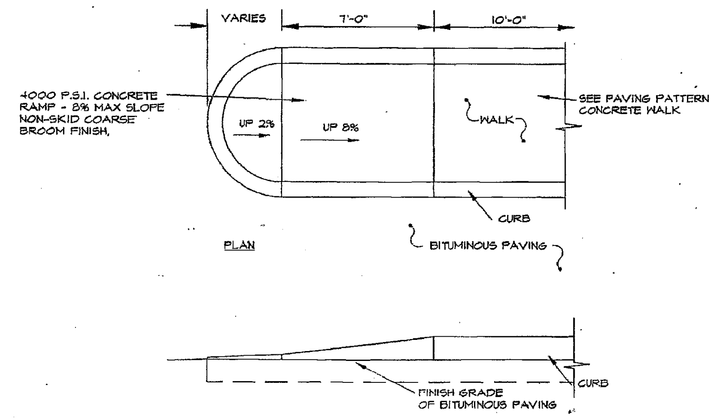

HANDICAP RAMP FOR PARKING LOT ISLANDS
N.T.S.

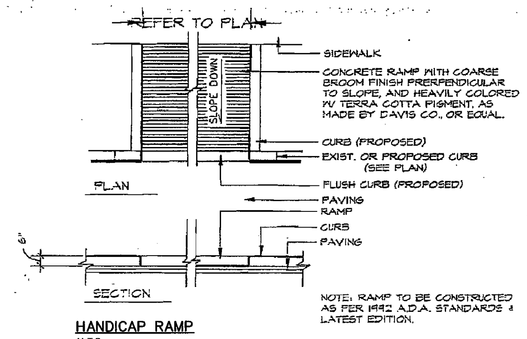

HANDICAP RAMP
N.T.S.

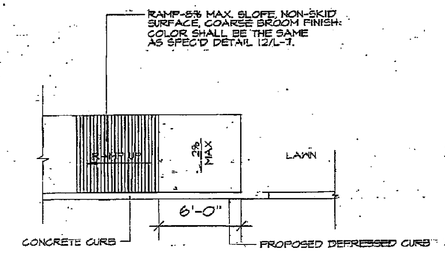

HANDICAP RAMP
N.T.S.

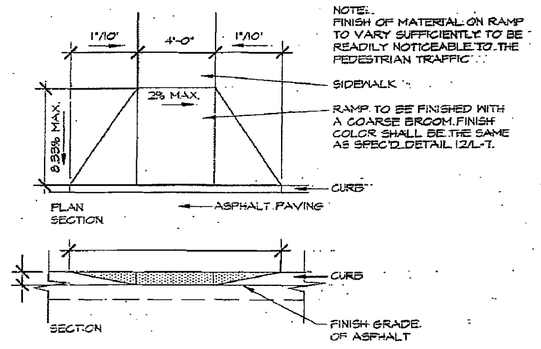

HANDICAP RAMP
N.T.S.

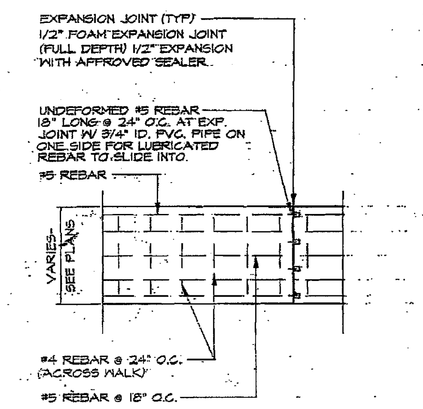

FIRE LANE CONCRETE PAVING REINFORCEMENT
N.T.S.

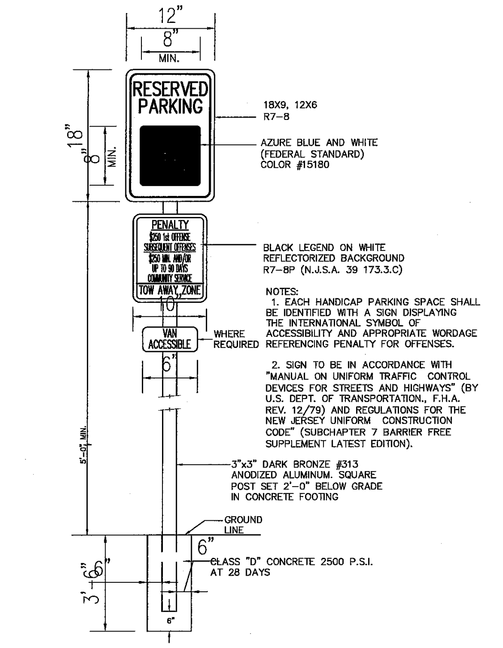

HANDICAP PARKING SIGN DETAIL
N.T.S.

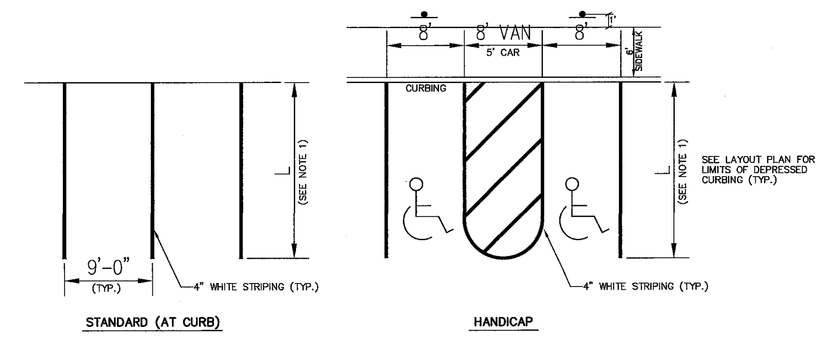

PARKING LOT STRIPING DETAIL
N.T.S.

NOTE:
1. LENGTH TO MATCH EXISTING

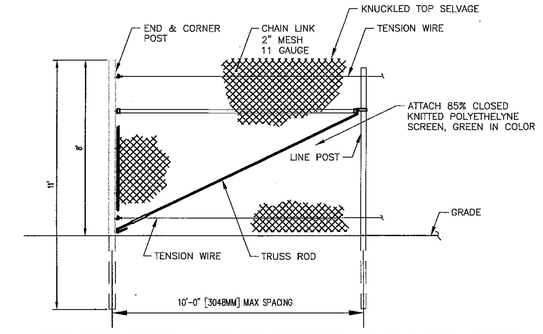

CONSTRUCTION FENCE SECTION ELEVATION DETAIL
N.T.S.

NOTE:
1. CONSTRUCTION FENCE TO BE SET OUTSIDE ALL SILT FENCE.
2. TWO GATES SHALL BE PROVIDED.

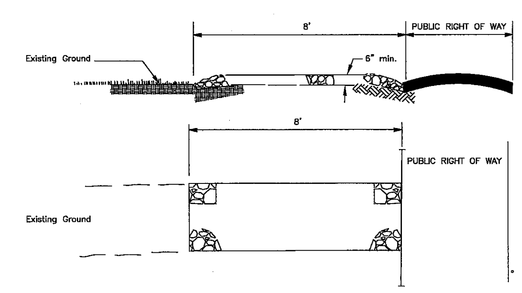

*NOTE INDIVIDUAL LOT ACCESS POINTS MAY REQUIRE STABILIZATION. THICKNESS SHOWN IS FOR TRACKING PAD ONLY (TYP)

PLAN VIEW

1. PLACE TRACKING PAD AT LOCATION(S) AS SHOWN ON THE SOIL EROSION AND SEDIMENT CONTROL PLAN.
2. STONE SIZE SHALL BE ASTM C-33, SIZE NO. 2 OR 3, CRUSHED STONE.
3. THE THICKNESS OF THE STABILIZED CONSTRUCTION ENTRANCE SHALL NOT BE LESS THAN SIX INCHES (6").
4. THE WIDTH AT THE EXISTING PAVEMENT SHALL NOT BE THAN THE FULL WIDTH OF POINTS OF INGRESS AND EGRESS.
5. THE TRACKING PAD SHALL BE MAINTAINED IN A CONDITION WHICH WILL PREVENT TRACKING OR FLOWING OF SEDIMENT ONTO CAMPUS OR TO PUBLICK ROADS. THIS REQUIRES PERIODIC TOP DRESSING WITH ADDITIONAL STONE OR ADDITIONAL LENGTH AS CONDITIONS DEMAND AND REPAIR AND/OR CLEANOUT OF ANY MEASURE USED TO TRAP SEDIMENT.
6. ALL SEDIMENT SPILLED, DROPPED, WASHED, OR TRACKED ONTO THE PUBLIC ROADWAY MUST BE REMOVED IMMEDIATELY.

8' TRACKING PAD
N.T.S.

Einhorn Yaffee Prescott
Architecture & Engineering, P.C.
1000 Potomac Street, NW
Washington, D.C. 20007
Telephone: 202.471.5000
Fax: 202.471.5050

eypae.com

EYP/

VAN NOTE-HARVEY ASSOCIATES
777 ALEXANDER RD. SUITE 102
PRINCETON, NJ 08540
Telephone:(609)-987-2323

KEY PLAN:

TRUE NORTH JOB NORTH

NO.	REVISION/SUBMISSION	DATE
2.	ADDENDUM #3	04-01-08
1	BID SET	1.20.2008

THE COLLEGE OF NEW JERSEY

New Art & IMM Building

Ewing, New Jersey

DATE:	1.20.2008
SCALE:	N.T.S.
EYP PROJECT NO.	1006041.01
DESIGNED BY:	BMF/KLS
DRAWN BY:	BMF
CHECKED BY:	KLS

Kent L. Scully
NEW JERSEY PROFESSIONAL ENGINEER LICENSE NO.: 26220

CONSTRUCTION DETAILS AND NOTES

CE-9

©2007 Einhorn Yaffee Prescott, A&E

N:\P\36959\dwg\BID SET\36959-DTLS.DWG