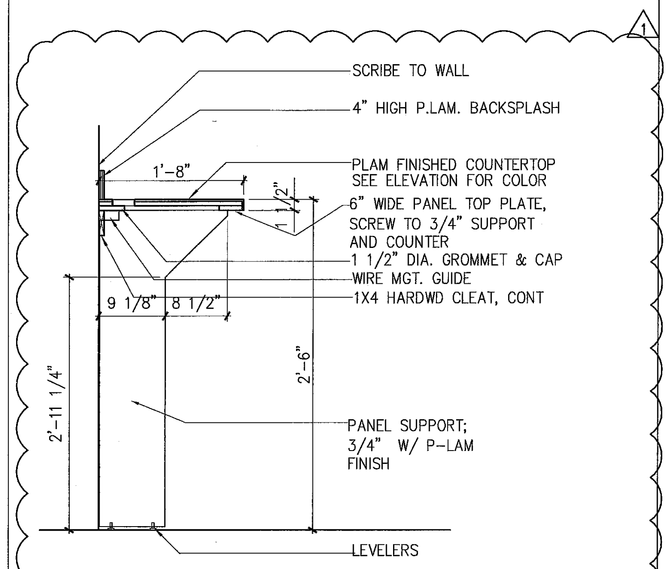

12 A711 SECTION AT COUNTERTOP
SCALE: 1" = 1'-0"
* SHOP DRAWINGS REQURIED

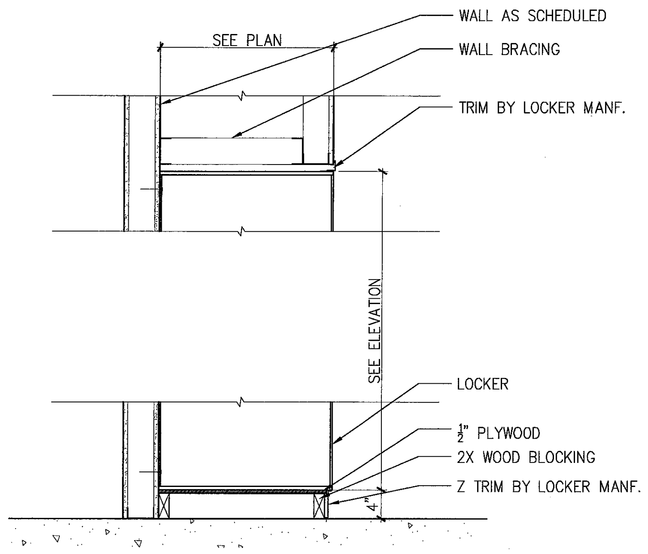

9 A701 LOCKER DETAIL
SCALE: 1-1/2" = 1'-0"

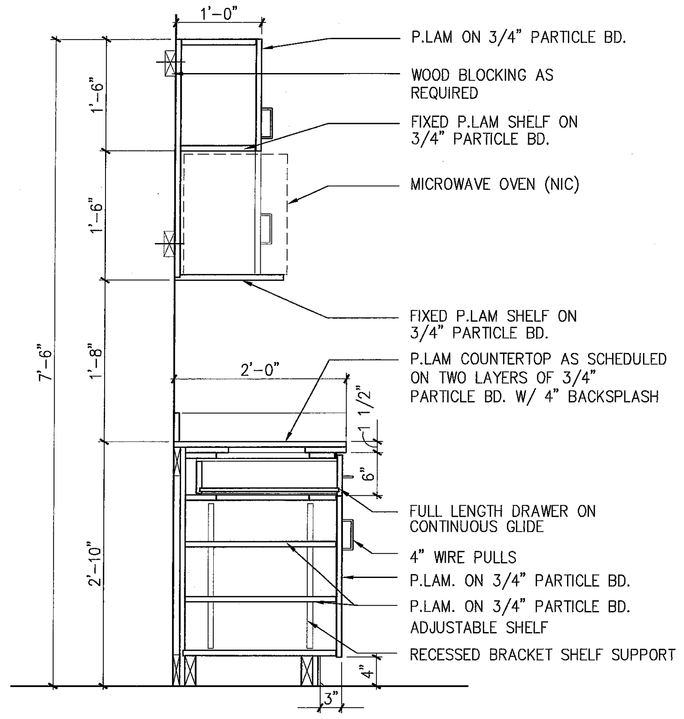

6 A701 COUNTER AT KITCHEN
SCALE: 3" = 1'-0"
* SHOP DRAWINGS REQURIED

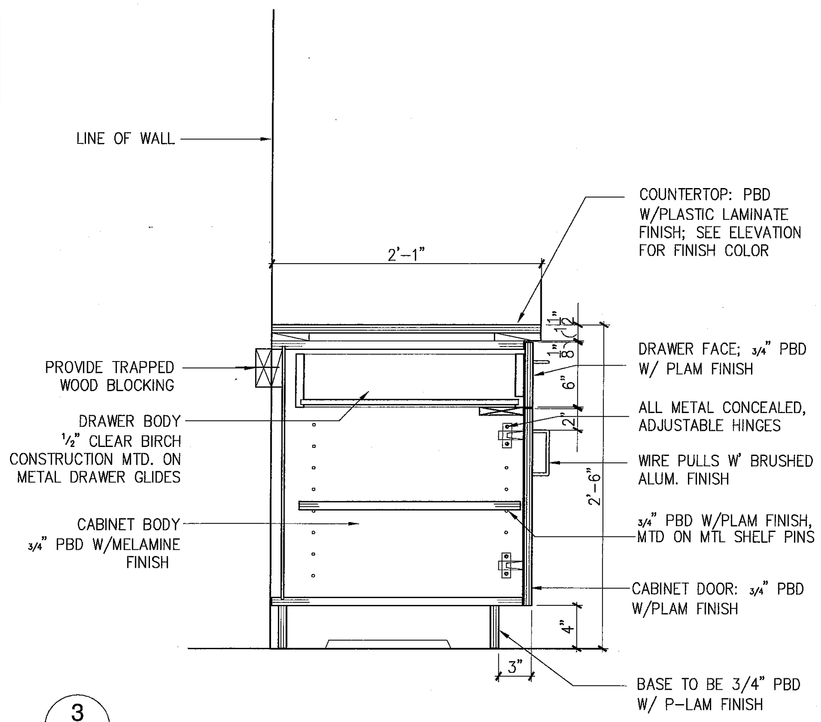

3 A701 SCALE: 1 1/2" = 1'-0"

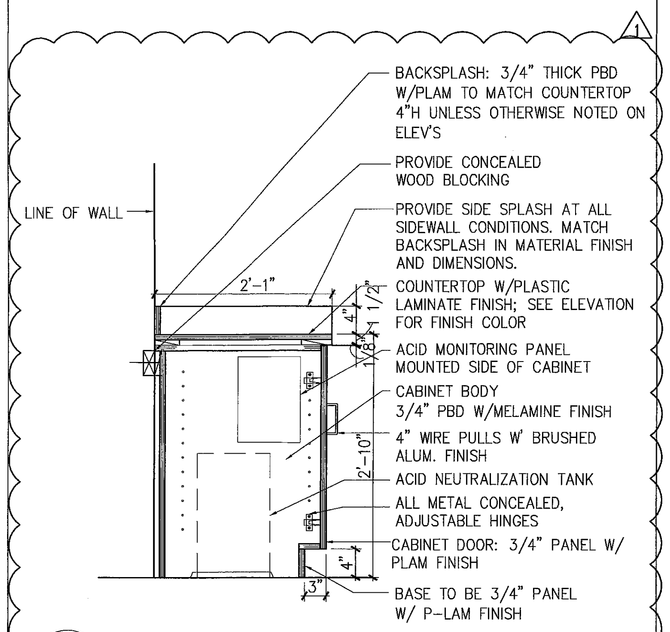

11 A711 BASE CABINETS @ ACID NEUTRALIZATION TANKS
SCALE: 1" = 1'-0"
* SHOP DRAWINGS REQURIED

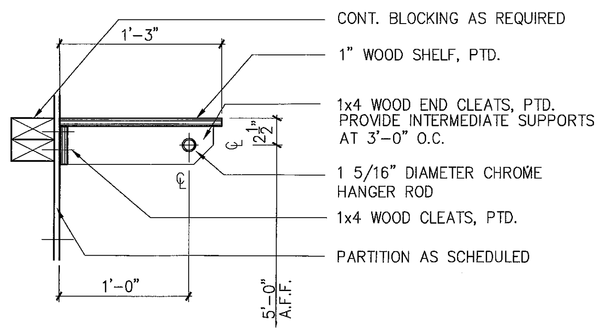

8 A711 TYP. CLOSET ROD AND SHELF DETAIL
SCALE: 1-1/2" = 1'-0"

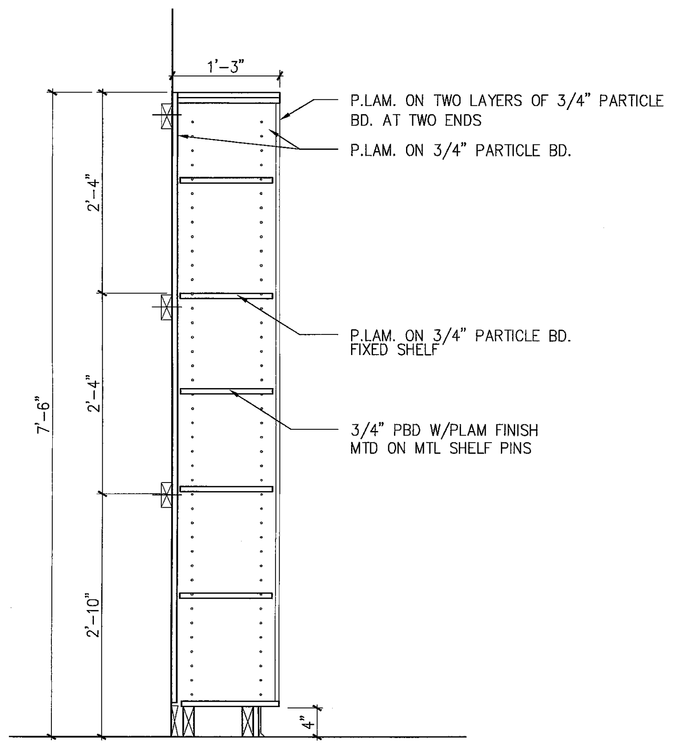

5 A711 TYP. SECTION AT BOOKCASE
SCALE: 1" = 1'-0"
* SHOP DRAWINGS REQURIED

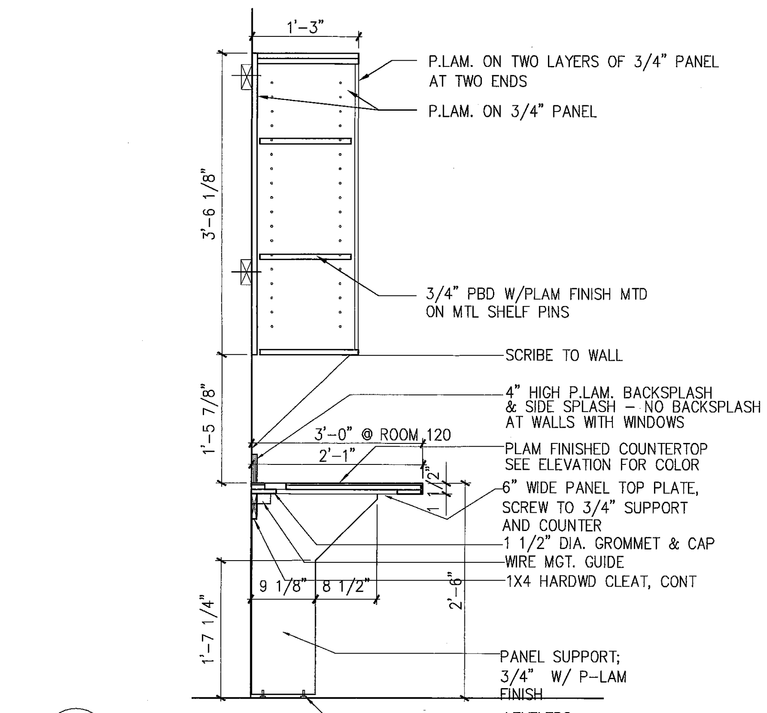

2 A711 TYP. SECTION AT COUNTERTOP
SCALE: 1" = 1'-0"
* SHOP DRAWINGS REQURIED

10 A711 NOT USED

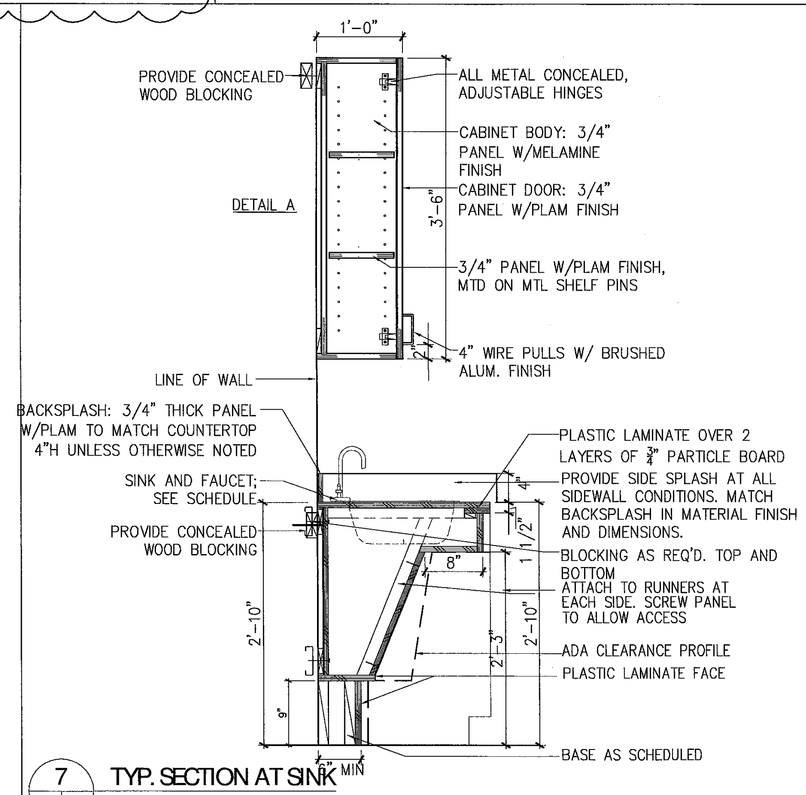

7 A711 TYP. SECTION AT SINK
SCALE: 1" = 1'-0"
* SHOP DRAWINGS REQURIED

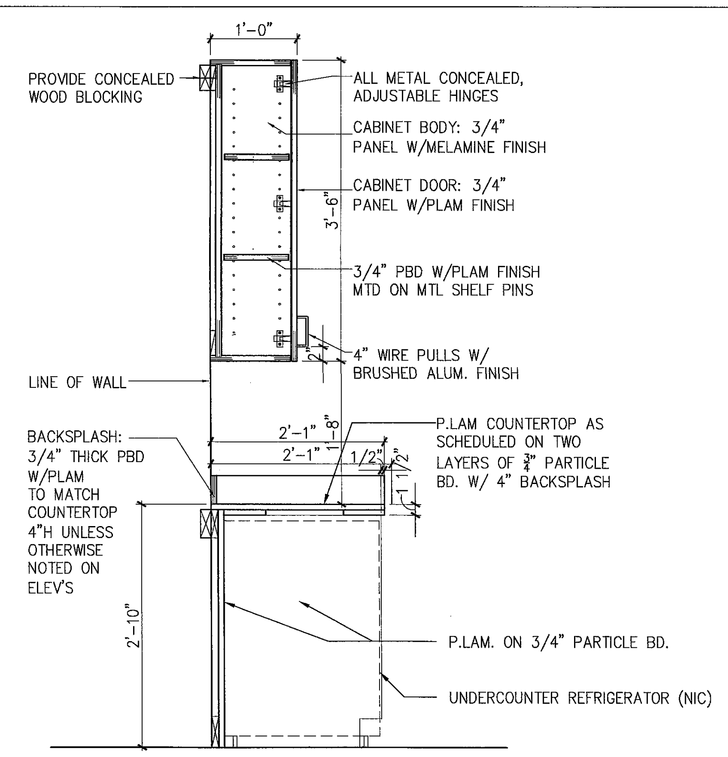

4 A711 BASE/ WALL CABINETS AT STUDENT LOUNGE
SCALE: 1" = 1'-0"
* SHOP DRAWINGS REQURIED

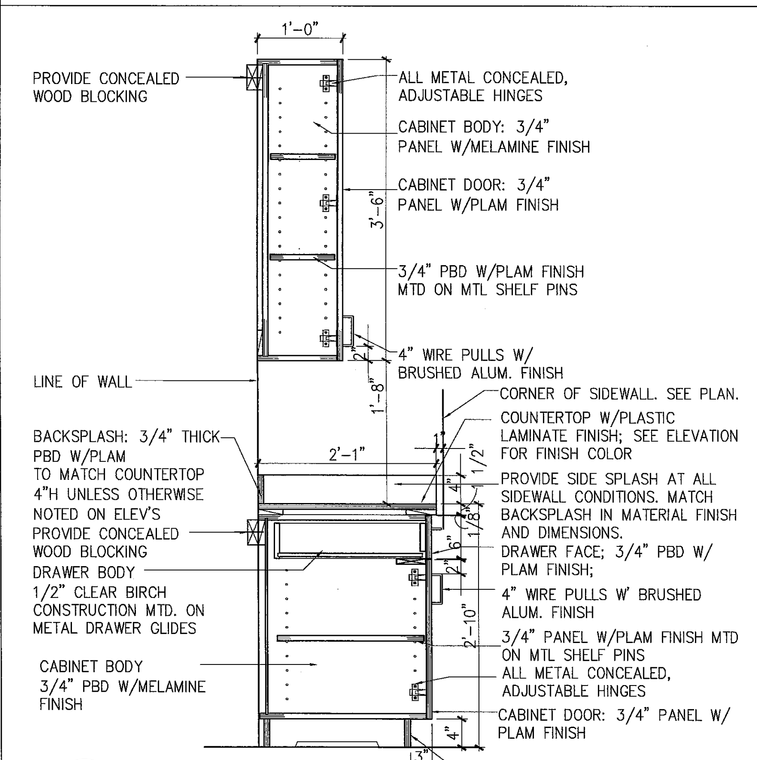

1 A711 TYP. BASE/ WALL CABINETS
SCALE: 1" = 1'-0"
* SHOP DRAWINGS REQURIED

© 2007 Einhorn Yaffee Prescott, A&E

Einhorn Yaffee Prescott
Architecture & Engineering, P.C.
1000 Potomac Street, NW
Washington, D.C. 20007
Telephone: 202.471.5000
Fax: 202.471.5050

eypae.com

EYP/

KEY PLAN:

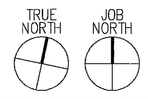

NO.	REVISION/SUBMISSION	DATE
1	ADDENDUM #3	4.1.2008

THE COLLEGE OF NEW JERSEY

New Art & IMM Building

Ewing, New Jersey

DATE:	2.20.2008
SCALE:	AS NOTED
EYP PROJECT NO.	1006041.01
DESIGNED BY:	RG
DRAWN BY:	EC
CHECKED BY:	BL

Matthew S. Chalifoux
NEW JERSEY REGISTERED ARCHITECT
LICENSE NO. 10016

CASEWORK DETAILS

A711